FORM Identifier: F 190 Revision: 01 Page: 1/1	**Product specification for Inductive Components**	**MAGNETEC GmbH** Industriestrasse 7 D-63505 Langenselbold

Client:	**MAGNETEC GmbH**	**Magnetec P/N:**	**MB-115**	**Magnetec A/N:**	**12122**
Client's p/n:	**/**	**PS Index:**	**02**	**PS Revision:**	01
Subject:	**EMC Component**			**Type:**	**E**

1.1 Mechanical outline

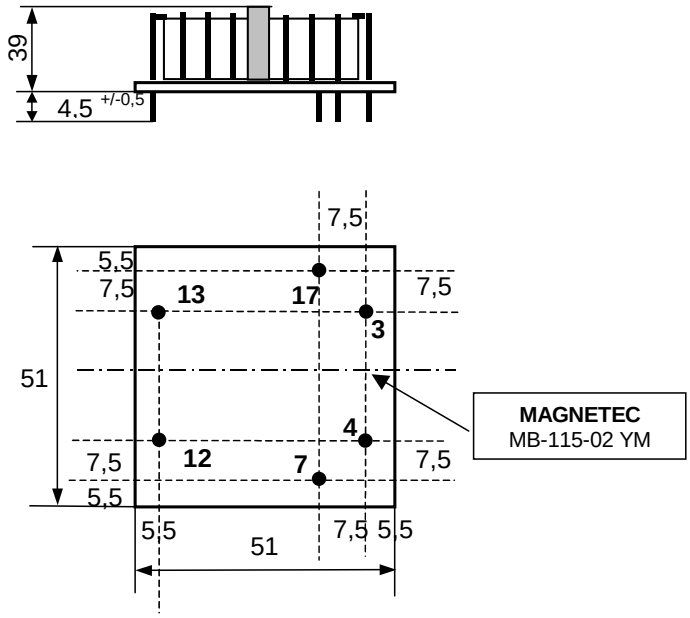

1.2 Wiring diagram

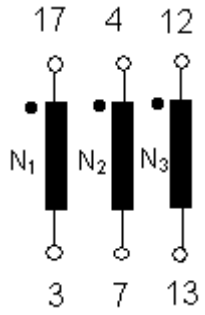

Wire diameter 2,5mm

☒ Date code acc. to IEC 62 5.1 (YM)
☐ Date code acc. to IEC 62 5.2 (YW)
☒ RoHS compliant acc. to 2002/95/EC

2. Nominal values

Core material:	**NANOPERM®**	Wire Resistance:	**<= 1,8 mOhms**
Nominal voltage:	**440 V_{eff}**	High voltage strength:	**Up,eff = 2,5 kV**
Nominal inductance:	**3 x 1,0 mH**	Operating temperature:	**-40 ... +60 °C**
Nominal current:	**30 A**	Storage temperature::	**-40 ... +85 °C**
Leakage inductances:	**5,0 µH**	Standard:	**EN 60938-1**
Comments:	**N1 = N2 = N3 = 6 turns**		

3. Inspection values

Measured value	Measuring limits	Measuring configurations	
Inductivity L1; L2; L3 [mH]	**0,68 - 1,5**	**f = 10 kHz**	**Ieff = 1 mA**
Wire resistance Rcu1; Rcu2; Rcu3 [mOhms]	**NA - 1,8**	**RT = 25°C**	
HV strength between N1 and N2 / Iiso<1mA	**OK - NOK**	**Up,eff = 2,5 kV**	**t = 2 s**
	-		
	-		

4. Others

Marking:	**MAGNETEC MB-115-02 YM (date of fabrication year / month)**
Packaging:	**8 pcs. per layer, 4 layers per carton box; PU = 32 pcs.**
Comments:	

Index / Rev.	Alteration	Date
01 / 00	Product spezification	28.08.2001
02 / 01	New form, core M-382	11.09.2007

Created:	Á. Kovách 11.09.2007	**Approved (Techn):**	F. Zámborszky 29.10.2007	**Approved (Quality):**	V. Kaposztas 29.10.2007	**Released:**	F. Rauscher 29.10.2007